SPECIFICATION APPLIED

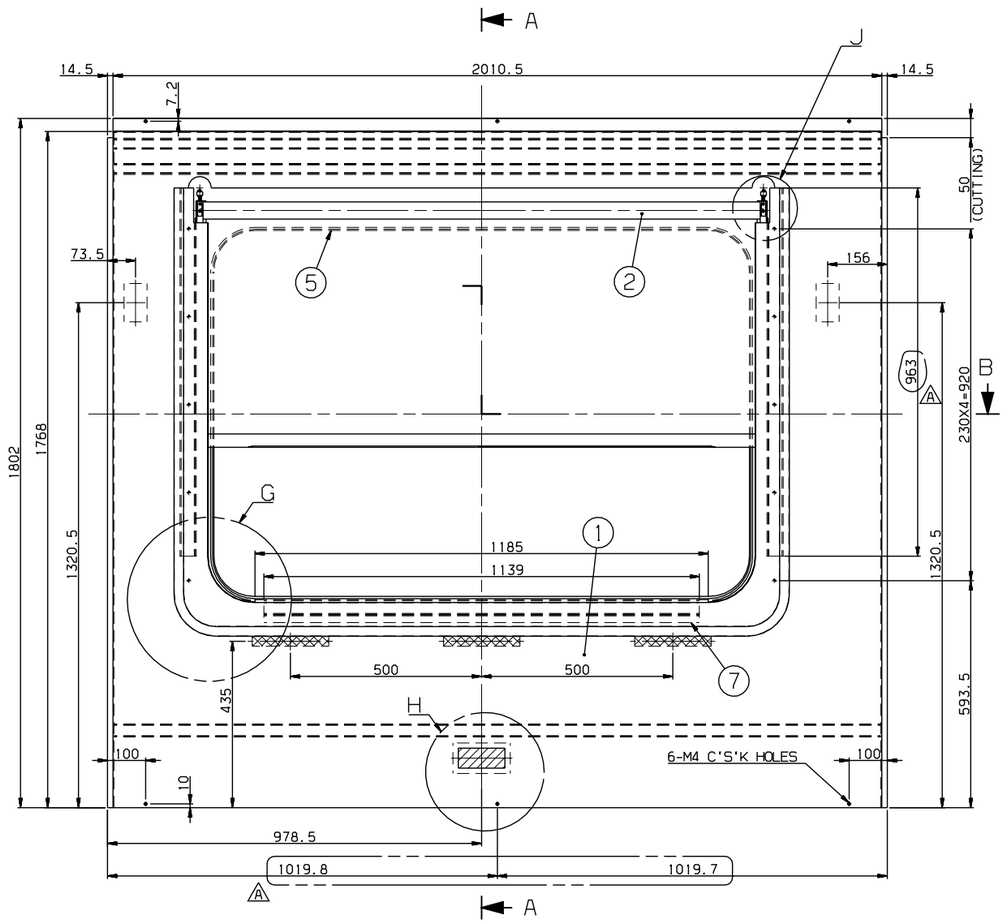

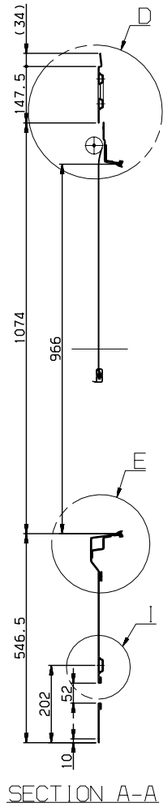

SECTION A-A

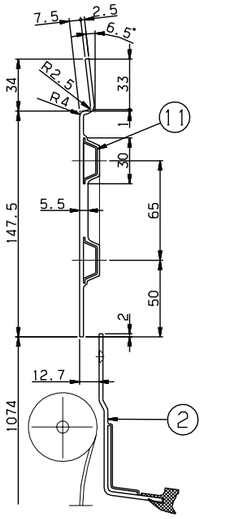

DETAIL D
SCALE=1/2

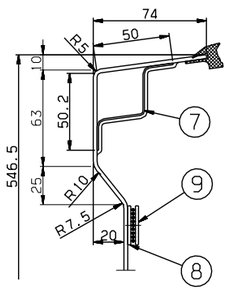

DETAIL E
SCALE=1/2

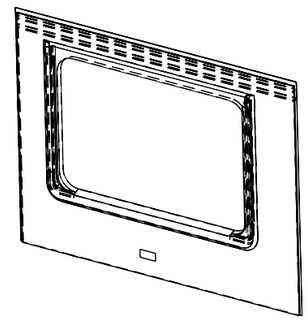

ISO VIEW

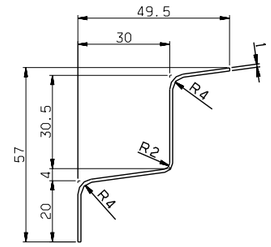

DETAIL #7
SCALE=1/1

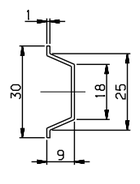

DETAIL #11
SCALE=1/1

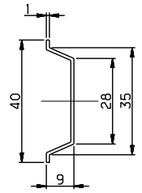

DETAIL #10
SCALE=1/1

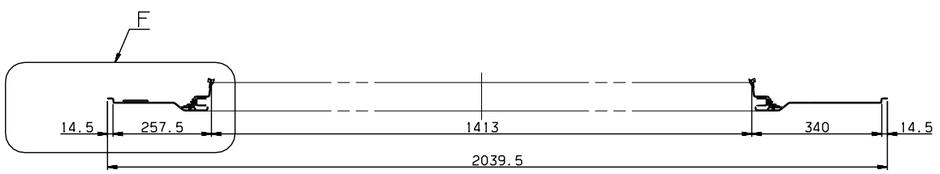

SECTION B-B

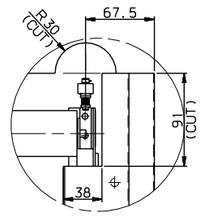

DETAIL J
SCALE=1/3

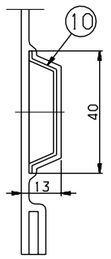

DETAIL I
SCALE=1/1

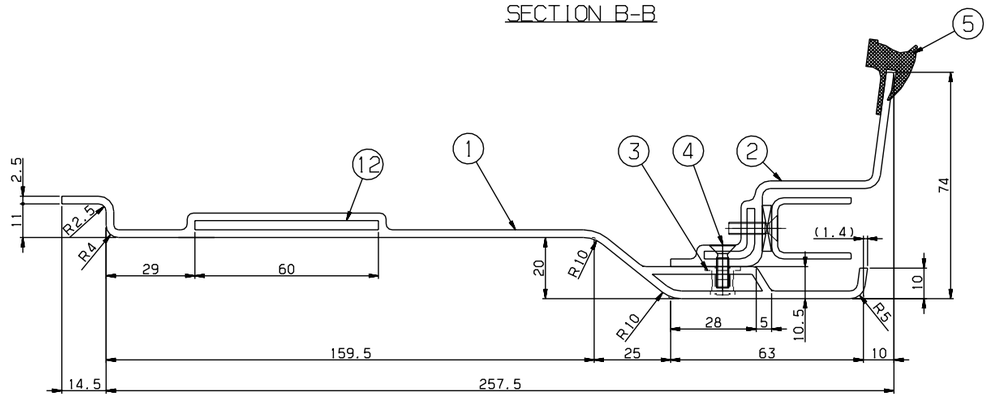

DETAIL F
SCALE=1/1

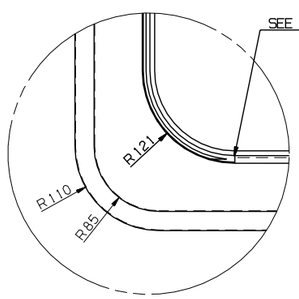

DETAIL G
SCALE=1/4

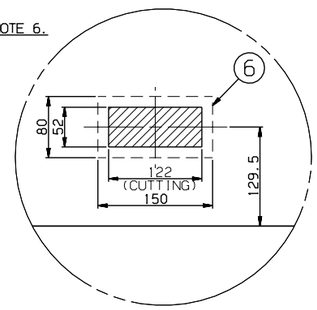

DETAIL H
SCALE=1/4

NOTE

1. AN INTERIOR PANEL'S COLOR(RAL 7047) AND SURFACE SHALL BE MANUFACTURED AFTER SAMPLE'S APPROVAL BY CUSTOMER
2. PART 5 SHALL BE CUT ADEQUATELY AND USED
3. PART 2 SHALL BE WELL OPERATED UNDER CONDITION OF ASSEMBLY
4. PART 8 SHALL BE FIXED ON THE PART 1, AND PART 9 SHALL BE DELIVERED SEPERATETLY
5. THE INTERFACE BETWEEN PART 1 AND PART 2 SHALL BE STRONGLY SEALED
6. PART 4 SHOULD BE APPLIED WITH PART 13.

A 13	CP910004-406	ADHESIVE	ASSY	1		LOCTITE 242
12	RFP51107EJ0-012	SEAT, TAP	SUS304	2		PL T3x100x60
11	RFP51107EJ0-011	STIFFENER	A1050P	2		T1
10	RFP51107EJ0-010	STIFFENER	A1050P	1		T1
9	RFP51107EJ0-009	DUAL_LOCK, FASTENER	ASSY	3		3M, SJ-3550 L=200(DUAL TAPE)
8	RFP51107EJ0-008	DUAL_LOCK, FASTENER	ASSY	3		3M, SJ-3551 L=200(DUAL TAPE)
7	RFP51107EJ0-007	STIFFENER	SUS304	1		T1, L=1135
6	RFP51107EJ0-006	SEAT, TAP	SUS304	1		PL T3x150x80
5	RFP51107EJ0-005	RUBBER, SECTION	ASSY	1		RFP51011ANO, L=4600
4	RS60607-098S	SCREW, F.H	SUS304	10		M4x14
3	RFP51107EJ0-003	NUTSERT	SUS304	10		M4
2	RFP51009ANO	PANEL, BLIND WINDOW	ASSY	1		
1	RFP51107EJ0-001	PANEL	FRP	1		T2.5

품번 NO.	부품 번호 PART NO.	품명 DESCRIPTION	재질 MATERIAL	수량 Q'TY	중량 W.T	비고 REMARKS

승인 APP	JeongYul Lee 2014.10.14	재질 MAT'L	ASSY	마 감 FINISH	
검도 CHK	KeongBong Park 2014.10.14	중량중 G.W		TITLE	WINDOW, MASK, TYPE G
설계 DGN	HeonUk Lee 2014.10.14	일반공차 MC / VD / CT	B / B / B	도면 번호 DRG. NO	RFP51107EJ0 Ver. 00 Rev. -A
제도 DRG	HeeSook Jeong 2014.10.14	SIZE	A1	SCALE 1/8	매수 SHEET 1 of 1

RSD1402 RFP- 난-PRJT 심리번호 CATIA

기호 MARK	일자 DATE	변경 내역 DETAIL OF REVISION(E.C ZONE)	설변번호 E.C NO.	설계 DGN	검도 CHK	승인 APP
Ax4	2014.12.18	ADDED PART NO.#13 & DIMENSION	RSD1402-U071	H.U.LEE	K.B.PARK	J.Y.LEE

기호 MARK	일자 DATE	변경 내역 DETAIL OF REVISION(E.C ZONE)	설변번호 E.C NO.	설계 DGN	검도 CHK	승인 APP

일반공차 GENERAL TOLERANCE			
주조 CASTING	~ 40	2	4
	~ 30	2	3
	~ 10	1	1.5
프레스 PRESS	< 3	0.5	1
절삭 MACHINING	~3150	-	7
	~1600	4	5
	~800	3	4
	~400	2	3
	~200	1.5	2
	~100	1	1.5

등급 GRADE	A	B
주철, 주강품 CASTING (±)		
~20M	8	14	24
~15M	7	12	21
~12M	6	10	18
~8M	5	8	14
~4M	4	6	11
~2M	3	4	8
~1M	2	3	6
~315	1	2	4
~120	1	2	3
~30	1	1	1

등급 GRADE	A	B	C
용접 구조물 WELDING (±)			
~20M	-	6.0	8.0
~15M	-	5.0	7.0
~12M	-	4.0	6.0
~8M	-	3.0	5.0
~4M	0.8	2.0	4.0
~2M	0.5	1.2	2.0
~1M	0.3	0.8	2.0
~315	0.2	0.5	1.2
~120	0.15	0.3	0.8
~30	0.1	0.2	0.5
3~6	0.05	0.1	0.2

등급 GRADE	A	B	C
기계 가공품 MACHINING (±)			
주철,주강품 외 공통사항 GENERAL TOLERANCE			

본 도면은 당사 재산권과 회사의 영업비밀이므로 절대 - PROPERTY OF ISSUING ENTITY, CANNOT BE DISTRIBUTED OR REPRODUCED WITHOUT AUTHORIZATION.